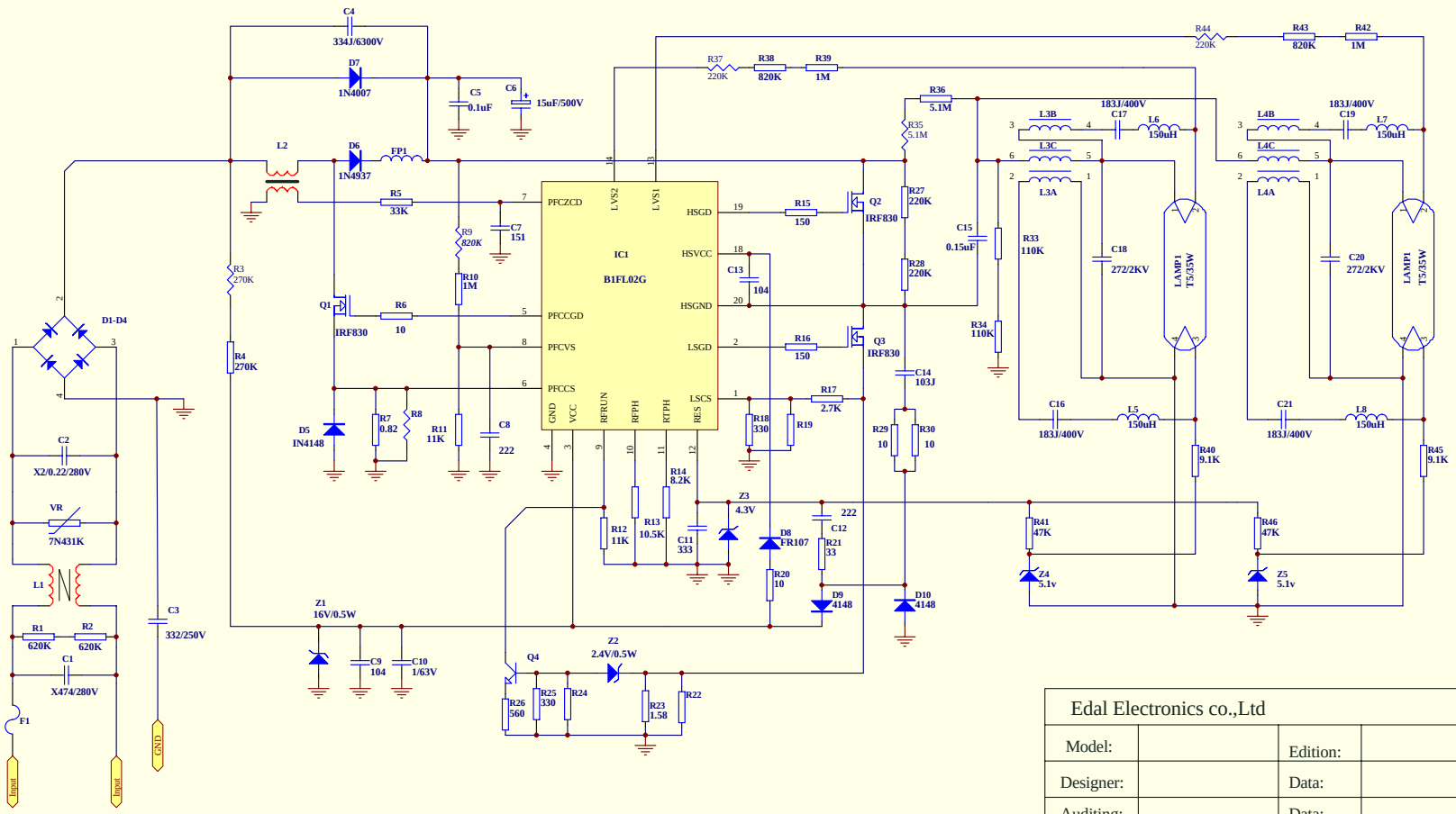

Edal Electronics co.,Ltd			
Model:		Edition:	
Designer:		Data:	
Auditing:		Data:	
Approved:		Data:	
Title:			